PWJT50KN

High Speed Winch 60 m/min - 5 Tons Capacity - Heavy Duty

Key features

- 3 Year Warranty, Customer Support and Service in the USA

Winch Description

Heavy Duty Winches are essential for pulling hefty loads without the physical work. This is the performance the equipment reaches with standard rope provided. The Highest Quality, most Technologically Advanced Winches in the Industry. This winch can pull a load of 11250 lb

PWJT50KN

Technical Specifications

1st Layer Rated Capacity	11240 lb / 5098 kg	**Number of Speeds**	2 Variable Speed
Speed /min	0-196 ft / 0-60 m	**Warranty**	3 Year

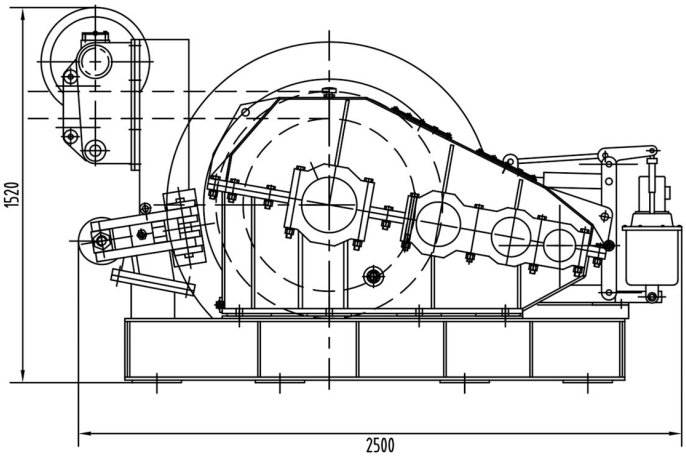

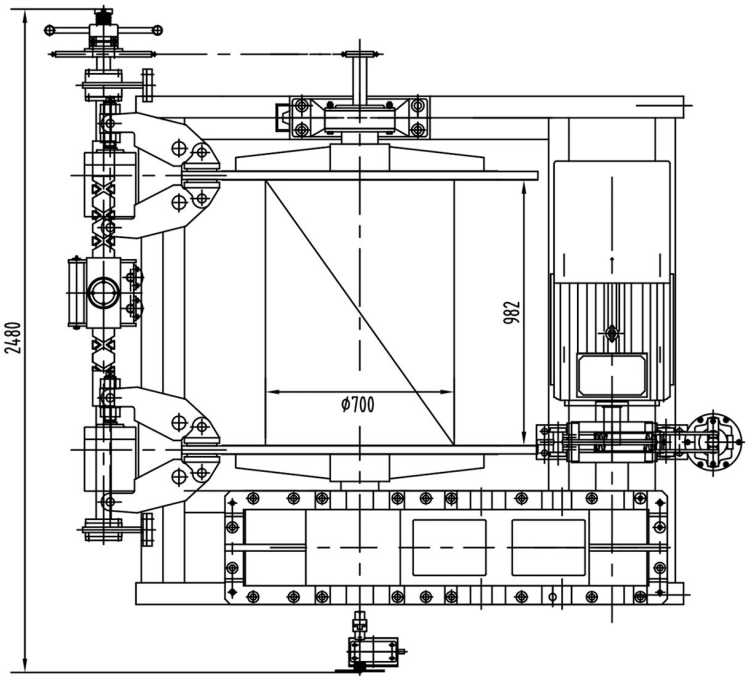

Service/Servicio	Load/Carga	Time/Tiempo	Maintenance/ Mantenimiento
Normal	< 65%	< 25%	6~12 (months/meses)
Heavy/Pesado	> 65%	> 25%	3~6 (months/meses)
Severe/Severo	Abnormal Conditions En Condiciones Anormales Environmental, Geographical & Risky Ambientales, Geograficas & Riesgosas		1~3 (months/meses)
	<100%	<Duty cycle limit <Limite ciclo de trabajo	

Packaging Weight & Dimensions

Package 1 Gross Weight	7056 lbs / 3201 Kg