PWMD50T12M

50 ton 12 mts. 4 ways 2 Speed M3 / H2 Optional Wireless

Key features

- Duty Classification H3/M4/1Am/Class C
- US and EU Standards ASME HST-4, ASME B30.16, IEC60204-32
- 3 Year Warranty, Customer Support and Service in the USA

Electric Wire Rope Hoist Description

50 Ton Wireless Electric Wire Rope Hoists are used for raising and lowering material. Power Cord is standard at 3 ft. for Hook and Push Trolley Mounts. Power Cord is standard at 3 ft. for Motorized Trolley Mounts. Hoists usually ship within 1-3 business days after ordering. Please call us at 1 (800) 971-8061 for any special requests. The Highest Quality, most Technologically Advanced Hoist in the Industry. Our hoist ranges from basic Light Duty H1 to Heavy Duty Motor - 60 minute, H4 classification, Class F insulation with cooling fins and standard thermal motor protection. Compact lightweight body offers one of the lowest headroom hoists in the industry. Extremely durable and reliable Pull Rotor Motor Brake. Contains NO brake coil to fail like conventional disc brakes. Durable Push-Button Pendant for easy, one-handed operation. (Now with an included professional Industrial wireless remote control kit). Includes strain relief wire molded to pendant cord for added support and reliability. Easy Maintenance Control Panel is hinged to swing out to provide fast, easy, and trouble-free access. Completely Sealed Body suitable for both indoor and outdoor applications, including harsh environments. Gaskets throughout the hoist provide an IP55 rating. Oil Bath and precision machined helical and spur gears provide for quiet, smooth, and cool operations.

Technical Specifications
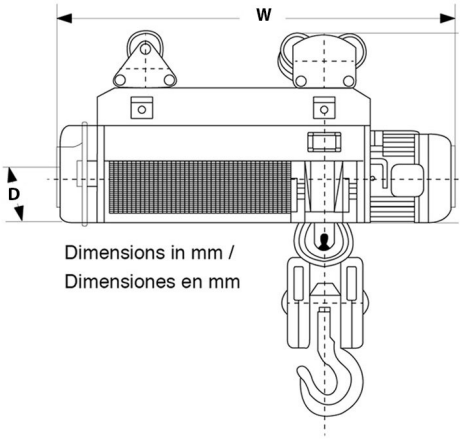
Rated Load Capacity	110000 lb / 50000 kg	**IEC Motor Protection**	IP55
Standard Lifting Height	40 ft / 12 m	**Dynamic Brake**	Optional with VFD Driver
Speed /min	1-8 ft / 0.24-2.4 m	**Control**	Pendant Control and Optional Wireless F21
Number of Speeds	2 Speed	**Control Voltage**	24 V
Voltage	3 Phase 208~240/440~480V 50/60Hz	**Contactor**	Schneider or EATON
Available Voltages	460V-US / 380V-CHILE	**Humidity**	<85%
Duty Class	H3/M4/1Am/Class C	**Temperature**	-4°~104° F / -20°~40° C
Motor/Engine Type	Squirrel Cage Induction Motor	**Trolley Power**	1.5 kW 3 Ph
Motor/Engine Power	18.5 kW 3 Ph	**Noise Level**	82 dB
Motor RPM	1728@60Hz 1440@50HZ	**Standards Compliance**	ASME HST-4 , ASME B30.16 , B30.17 , EN14492-2 , EN60204-32
Insulation Grade	F	**Warranty**	3 Year